Insert Gas Filled System

Gas Filled Temperature Gauge overcomes most of the limitations of other members of family.
It is offered in a vary wide temperature range i.e. (-) 200 to 700 deg cent. Practically any stem length can be offered and capillary length as long as 25 meter, without any loss of accuracy. Inert, non hazardous,non toxic nature of the filled system makes it virtually ideal choice of cross section of industries.

FEATURES

- Inert gas filled expansion
- Filled versions
- Bi-metal Case compensation

APPLICATION

- Liquid & gaseous mediums
- Corrosive environments
- Oil & Gas applications
- Chemical & Petrochemical

REFERENCE

- EN 13190

* Depending on range & stem diameter

STANDARD SPECIFICATIONS	
Dial size	: DN100 / DN125 / DN150 / DN250
Range	: -200...0...+700°C / -330...0...+1290°F
Mounting pattern	: Direct Bottom connection
Stem size	: 6.0 mm
Ingress protection	: IP 65
Stem length	: 70 mm to 2,000 mm*
Assembly	: Direct
Process connection type	: Adjustable connection
Process connection	: ½" NPT (M) / ½" BSP (M)

STANDARD PARAMETERS	
Accuracy	: CL 1.0 (Class 1)
Permissible ambient temperature	: -40...+60°C with/without dampening liquid
Storage & Transport temperature	: -50...+70°C without liquid dampening
	: 20...+60°C with liquid dampening
Over range limits	: 110% full scale
Stem pressure rating	: 25 bar (Without thermowell)
Weld joints	: TIG argon arc welding

MATERIAL OF CONSTRUCTION	
Sensing Element	: Inert Gas Filled bulb
Case & Ring Material	: AISI 304 SS
Stem & Process connection material	: AISI 316 SS
Dial	: Aluminum, black graduation on white background
Pointer	: Micrometer zero adjustable, aluminum, black powder coated
Gaskets	: NBR
Window	: Sheet glass

STAND. SPECIFICATIONS : DAMPENING LIQUID FILLED, GLYCERIN	
Gaskets & Filling plugs	: NBR
Dampening liquids	: Glycerin 99.7% (-20°C to 65°C) [Up to range 100°C]
Window	: Shatterproof safety glass

STAND. SPECIFICATIONS : DAMPENING LIQUID FILLED, SILICON	
Gaskets & Filling plugs	: NBR
Dampening liquids	: Silicon oil [Up to range 200°C]
Window	: Shatterproof safety glass

DRAWING

DIMENSIONAL DRAWING

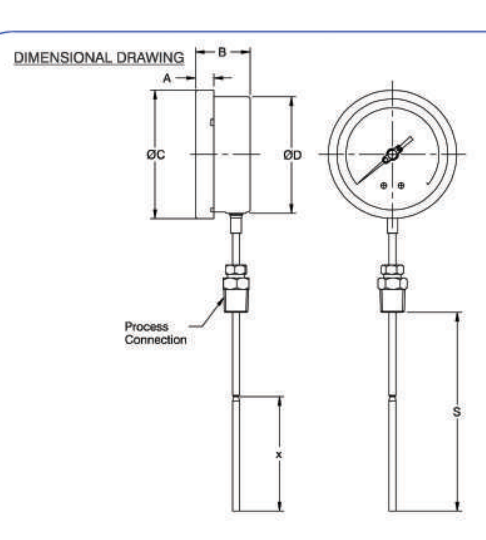

Mounting Pattern: 1A				
NS	100	125	150	250
A	12	15	15	18.5
B	48	48	48	50
ØC	111	129	161	263
ØD	100	118.5	149	250
S	*	*	*	*
X	**	**	**	**

* As per customer requirement.
** Refer technical sheet - Temperature Gauges.

DIMENSIONAL DRAWING

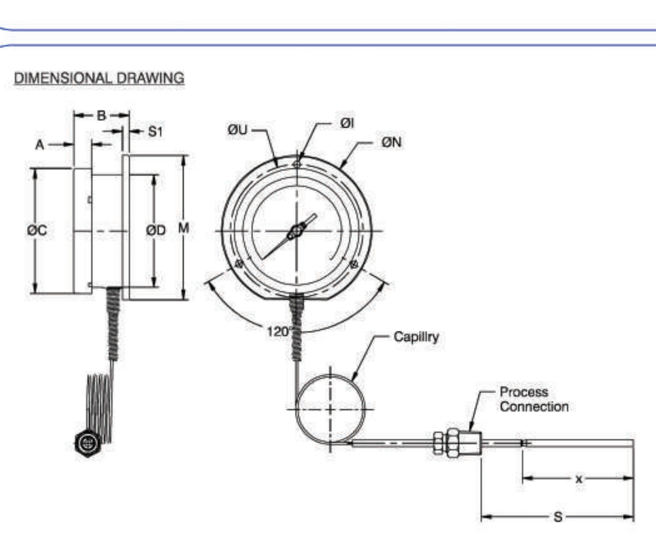

Mounting Pattern: 1B				
DN	100	125	150	250
A	12	15	15	18.5
B	52	50	52	51.5
ØC	111	129	161	263
ØD	100	118.5	149	250
ØI	6	6	6	7
ØN	134	150	186	290
M	128	143.5	172.4	286.5
S1	6	4	6	1.5
ØU	118	137	168	276
S	*	*	*	*
X	**	**	**	**

* As per customer requirement.
** Refer technical sheet - Temperature Gauges.

DIMENSIONAL DRAWING

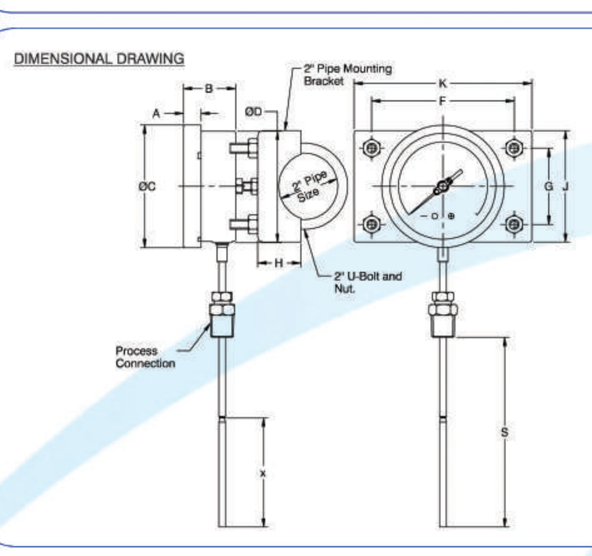

Mounting Pattern: 1C				
DN	100	125	150	250
A	12	15	15	18.5
B	48	48	48	50
ØC	111	129	161	263
ØD	100	118.5	149	250
S	*	*	*	*
X	**	**	**	**
F	129	129	129	129
G	69	69	69	69
H	39	39	39	39
J	101	101	101	101
K	161	161	161	161

* As per customer requirement.
** Refer technical sheet - Temperature Gauges.

All dimensions are in mm.

DRAWING

DIMENSIONAL DRAWING

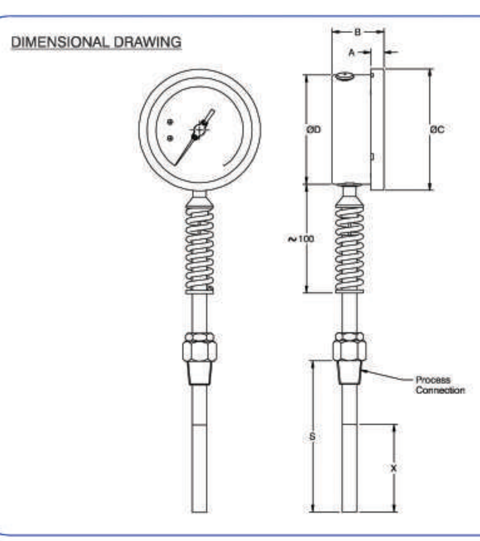

Mounting Pattern: 1G				
DN	100	125	150	250
A	12	15	15	18.5
B	48	48	48	50
ØC	111	129	161	263
ØD	100	118.5	149	250
S	*	*	*	*
X	**	**	**	**

* As per customer requirement.
** Refer technical sheet - Temperature Gauges.

DIMENSIONAL DRAWING

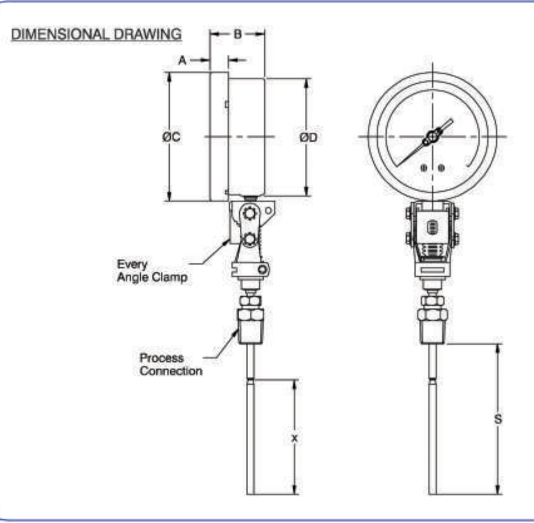

Mounting Pattern: 1J				
DN	100	125	150	250
A	12	15	15	18.5
B	48	48	48	50
ØC	111	129	161	263
ØD	100	118.5	149	250
S	*	*	*	*
X	**	**	**	**

* As per customer requirement.
** Refer technical sheet - Temperature Gauges.

DIMENSIONAL DRAWING

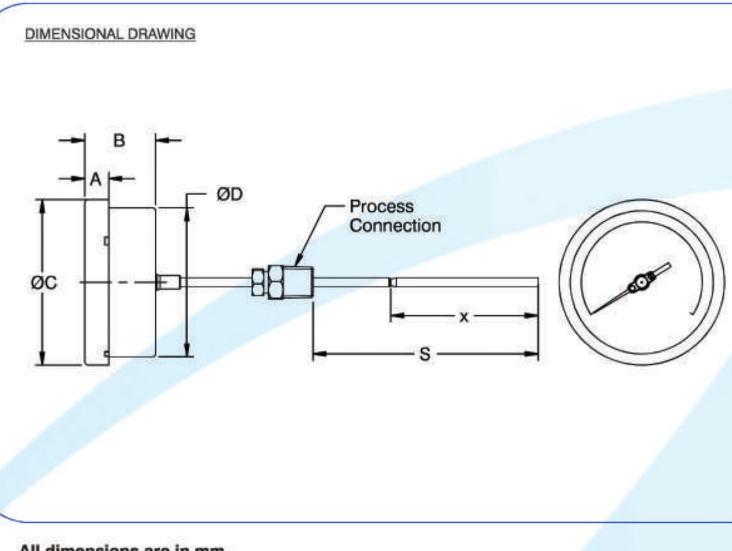

Mounting Pattern: 2A				
DN	100	125	150	250
A	12	15	15	18.5
B	48	48	48	50
ØC	111	129	161	263
ØD	100	118.5	149	250
S	*	*	*	*
X	**	**	**	**

* As per customer requirement.
** Refer technical sheet - Temperature Gauges.

All dimensions are in mm.

DRAWING

DIMENSIONAL DRAWING

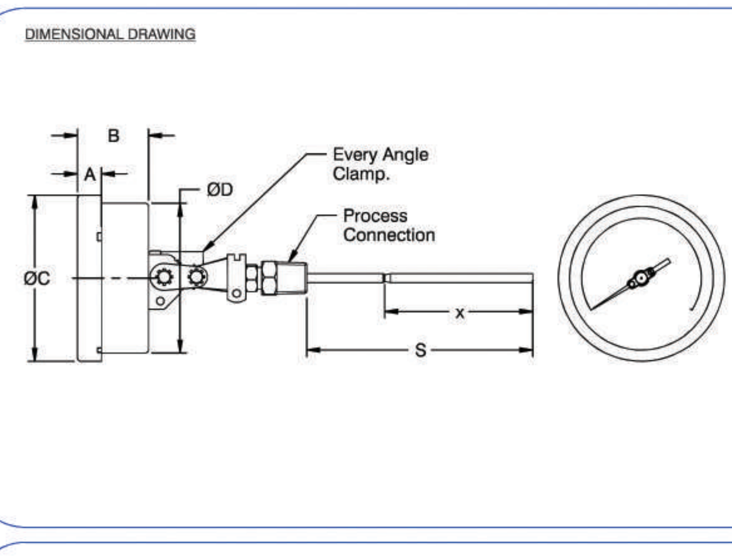

Mounting Pattern: 2B				
DN	100	125	150	250
A	12	15	15	18.5
B	48	48	48	50
ØC	111	129	161	263
ØD	100	118.5	149	250
S				
X	**	**	**	**

* As per customer requirement.
** Refer technical sheet - Temperature Gauges.

DIMENSIONAL DRAWING

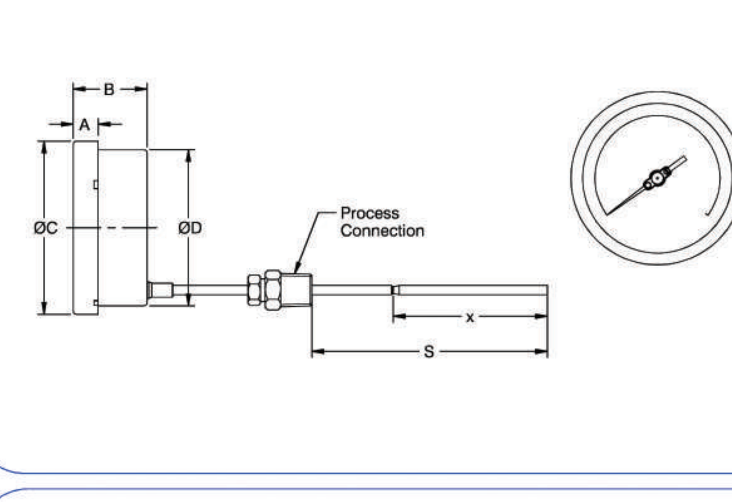

Mounting Pattern: 2E				
DN	100	125	150	250
A	12	15	15	18.5
B	48	48	48	50
ØC	111	129	161	263
ØD	100	118.5	149	250
S				
X	**	**	**	**

* As per customer requirement.
** Refer technical sheet - Temperature Gauges.

DIMENSIONAL DRAWING

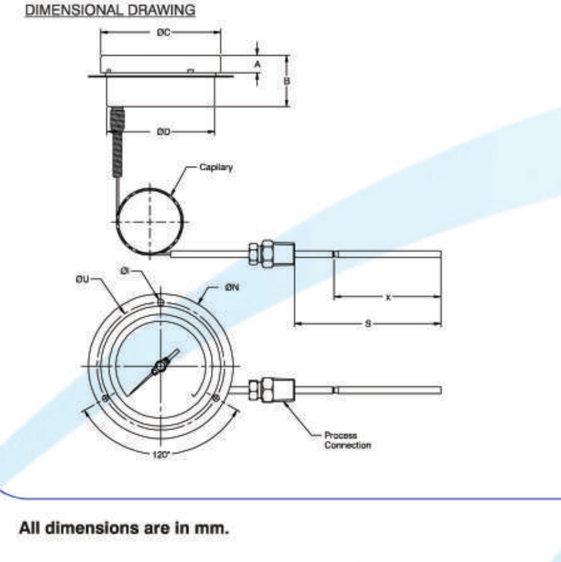

Mounting Pattern: 2F				
DN	100	125	150	250
A	12	15	15	18.5
B	48	48	48	50
ØC	111	129	161	263
ØD	100	118.5	149	250
ØI	6	6	6	7
ØN	134	150	186	290
ØU	118	137	168	276
S	*	*	*	*
X	**	**	**	**

* As per customer requirement.
** Refer technical sheet - Temperature Gauges.

All dimensions are in mm.

DRAWING

DIMENSIONAL DRAWING

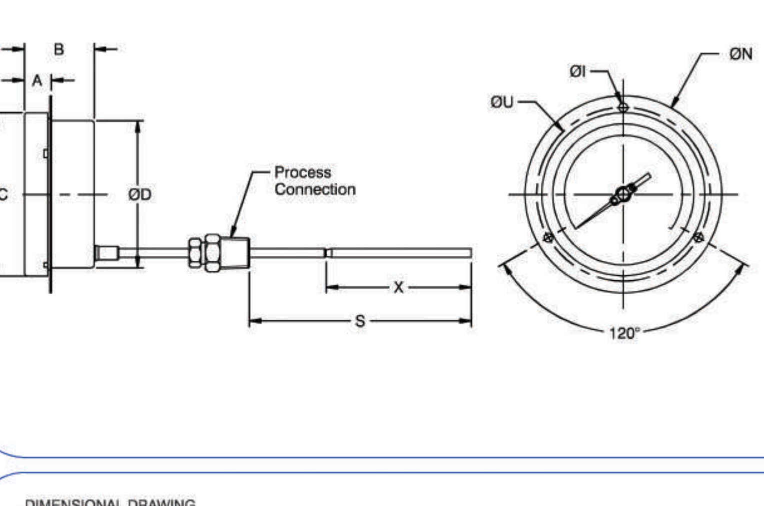

Mounting Pattern: 2E				
DN	100	125	150	250
A	12	15	15	18.5
B	48	48	48	50
ØC	111	129	161	263
ØD	100	118.5	149	250
S	*	*	*	*
X	**	**	**	**
F	129	129	129	129
G	69	69	69	69
H	39	39	39	39
J	101	101	101	101
K	161	161	161	161

* As per customer requirement.
** Refer technical sheet - Temperature Gauges.

DIMENSIONAL DRAWING

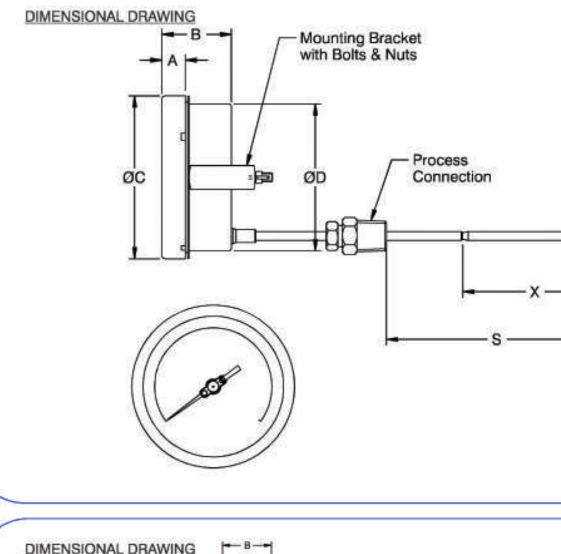

Mounting Pattern: 2G				
DN	100	125	150	250
A	12	15	15	18.5
B	48	48	48	50
ØC	111	129	161	263
ØD	100	118.5	149	250
J	72	75	106.5	180
K	16	15	16	30
V	108	125	158.5	270
S	*	*	*	*
X	**	**	**	**

* As per customer requirement.
** Refer technical sheet - Temperature Gauges.

DIMENSIONAL DRAWING

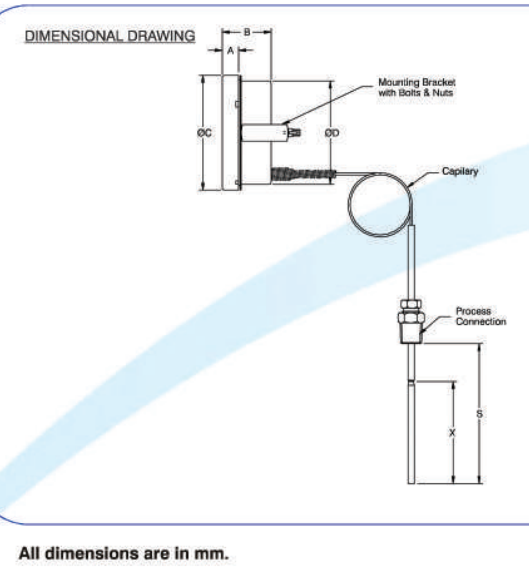

Mounting Pattern: 2G				
DN	100	125	150	250
A	12	15	15	18.5
B	48	48	48	50
ØC	111	129	161	263
ØD	100	118.5	149	250
J	72	75	106.5	180
K	16	15	18	30
V	108	125	158.5	270
S	*	*	*	*
X	**	**	**	**

* As per customer requirement.
** Refer technical sheet - Temperature Gauges.

All dimensions are in mm.

ORDERING CODE

MTG01 - D - XXX - 1A - MF - IP2 - XXXX - AC - 4NM - B8

1. DIAL SIZE	100 mm / 4"	D				
	125 mm / 4½"	E				
	150 mm / 6"	F				
	250 mm / 10"	H				
2. RANGE	**Refer "Range Table"**	XXX				
3. MOUNTING PATTERN	Direct, Bottom connection	1A				
	Wall/Surface/Projection mounting, Bottom connection	1B				
	2" Pipe/Yoke mounting, Bottom connection	1C				
	Bottom Connection With Anti-Vibration Spring	1G				
	Every Angle mounting, Direct Bottom connection	1J				
	Centre Back connection	2A				
	Every Angle mounting, Centre Back connection	2B				
	Lower, Back connection	2E				
	Panel/Front flange mounting, Lower Back connection	2F				
	Panel/bracket mounting, Lower Back connection	2G				
4. STEM DIAMETER	6.0 mm	MF				
	8.0 mm	MH				
	10 mm	MJ				
	1/4" (6.35 mm)	IR				
	9.5 mm	MI				
	12 mm	ML				
5. INGRESS PROTECTION	IP 65	IP2				
	IP 66	IP3				
	IP 67	IP4				
6. STEM LENGTH	**Up to 2000 mm**	XXXX				
	(Confirm factory before ordering)					
7. PROCESS CONNECTION TYPE	Fixed connection	FC				
	Adjustable connection	AC				
	Swivel / Revolving connection	SC				
8. PROCESS CONNECTION	½" NPT (M)	4NM	½" NPT (F)	4NF	3/8" BSP (M)	3BM
	¼" NPT (M)	2NM	M27x2.0MM(M)	6MM	¾" BSP (M)	5BM
	M20 X 1.5 mm (M)	4MM	½" BSP (M)	4BM	¾" NPT (F)	5NF
	¾" NPT (M)	5NM	¼" BSP (M)	2BM		
9. ASSEMBLY	Direct (Stem type)	B8				
	Remote (Capillary type)	B9				
10. CAPILLARY	AISI 304SS	OU				
	AISI 316 SS	OV				
11. ARMOUR	AISI 304SS	OX				
	PVC (Ambient max. 60°C)	OZ				
	AISI 316 SS	OY				
12. REMOTE MOUNTING LENGTH	250 mm up to 10,000 mm	XXXXX				
	10,000 mm up to 25,000 mm	XXXXX				

ORDERING CODE

9.OTHER OPTIONS	Case & Ring in AISI 316 SS (1A)	AA	Case & Ring in AISI 316 SS (1G)	GU	5 - point factory calibration certificate	SA
	Case & Ring in AISI 316 SS (1B)	AB	Case & Ring in AISI 316 SS (1J)	GV	Material test certificate 2.2	SM
	Case & Ring in AISI 316 SS (1C)	AC	Helium gas filled system	D9	SS tag plate, AISI 304 SS	WF
	Case & Ring in AISI 316 SS (2A)	AG	Shatterproof safety glass	FC	SS tag plate, AISI 316 SS	WG
	Case & Ring in AISI 316 SS (2B)	AH	Dampened movement	FM	Dial tag marking	WT
	Case & Ring in AISI 316 SS (2E)	AK	Maximum reading pointer	FW	Custom designed dia	WR
	Case & Ring in AISI 316 SS (2F)	AL	Dampening liquid, silicon oil	NA	IDampening liquid, glycerin	DG
	Case & Ring in AISI 316 SS (2G)	AM	Rubber parts, Viton	QA		

RANGE TABLE

STANDARD	RANGE	CODE	STANDARD	RANGE	CODE
-20...+40	XXX	-50...+100	XXX	0...250	XXX
-20...+60	XXX	-100...+60	XXX	0...300	XXX
-20...+80	XXX	0...50	XXX	0...400	XXX
-20...+100	XXX	0...60	XXX	0...500	XXX
-20...+120	XXX	0...80	XXX	0...600	XXX
-20...+180	XXX	0...100	XXX	0...650	XXX
-30...+50	XXX	0...120	XXX	50...650	XXX
-30...+70	XXX	0...150	XXX	100...600	XXX
-40...+40	XXX	0...160	XXX	100...700	XXX
-40...+60	XXX	0...200	XXX		XXX

NOTES:

1. For other ranges, please contact factory.
2. Equivalent scales available in °F, °C/°F, °F/°C.

Ordering Example : **MTG01 - D - XXX - 1A - MF - IP2 - XXXX - AC - 4NM - B8**

NOTES:

1. For other ranges, connections, please contact factory.
2. Equivalent scales available in °F, °C/°F, °F/°C.
3. Option "Case & Ring in AISI 316 SS" is applicable for DN100 & DN150 only.
4. While selecting capillary, Bottom connections are supplied with wall mounting flange & Back connection are with Panel / front flange.
5. 1/4" connections are available up to 1/4" (6.35 mm) stem diameter only.
6. 3/8" connections are available up to 10 mm stem diameter only.

MILLENNIUM INSTRUMENTS LIMITED
Tel : +91- 11- 220 143 25 / 27, Email : mil@miepl.com